0 603 230 103

Stand ~~94-01~~
Issue 08-04-15

Fig./Abb. 1

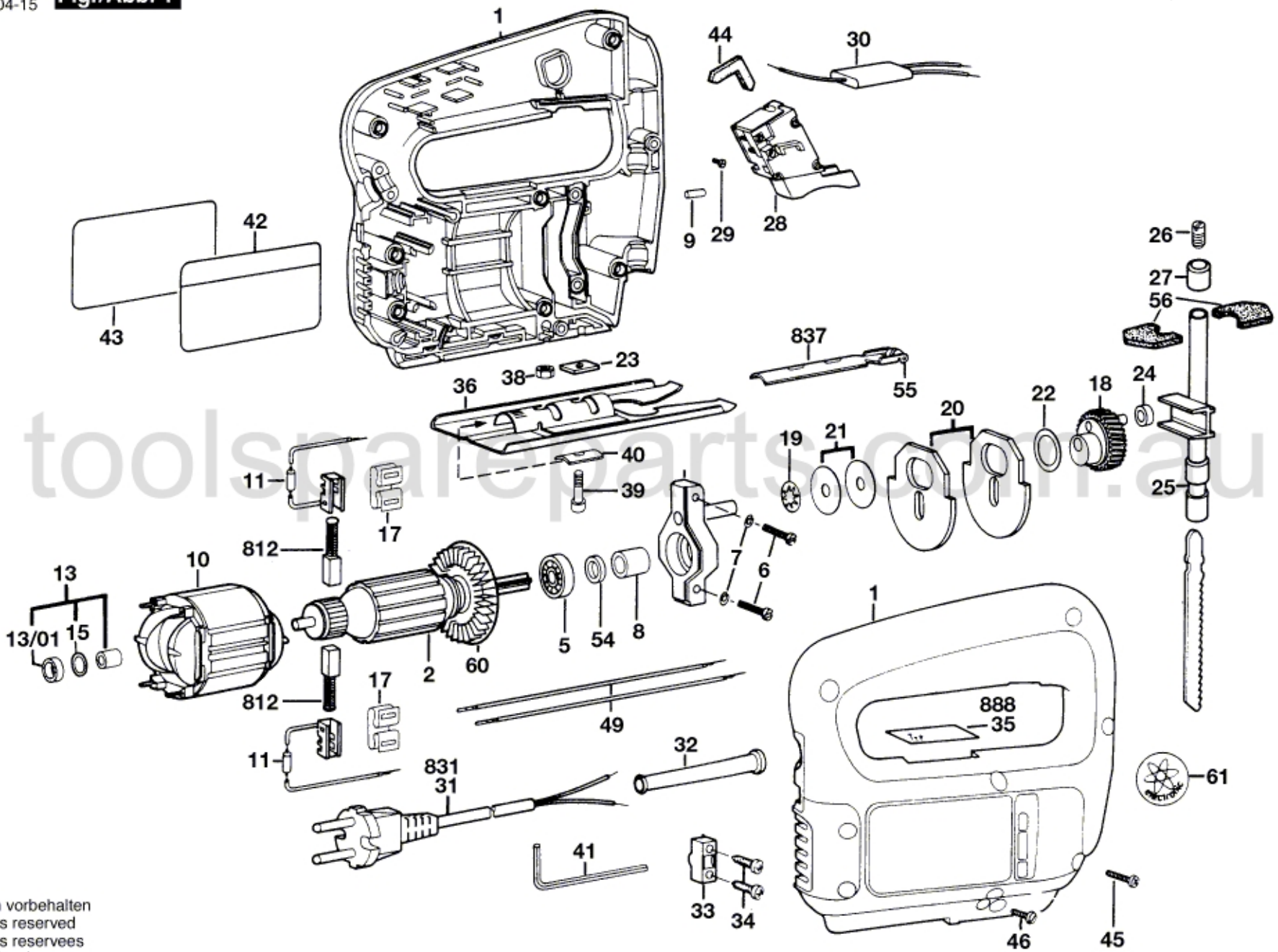

toolspareparts.com.au

Änderungen vorbehalten
Modifications reserved
Modifications reservees
Salvo modificaciones